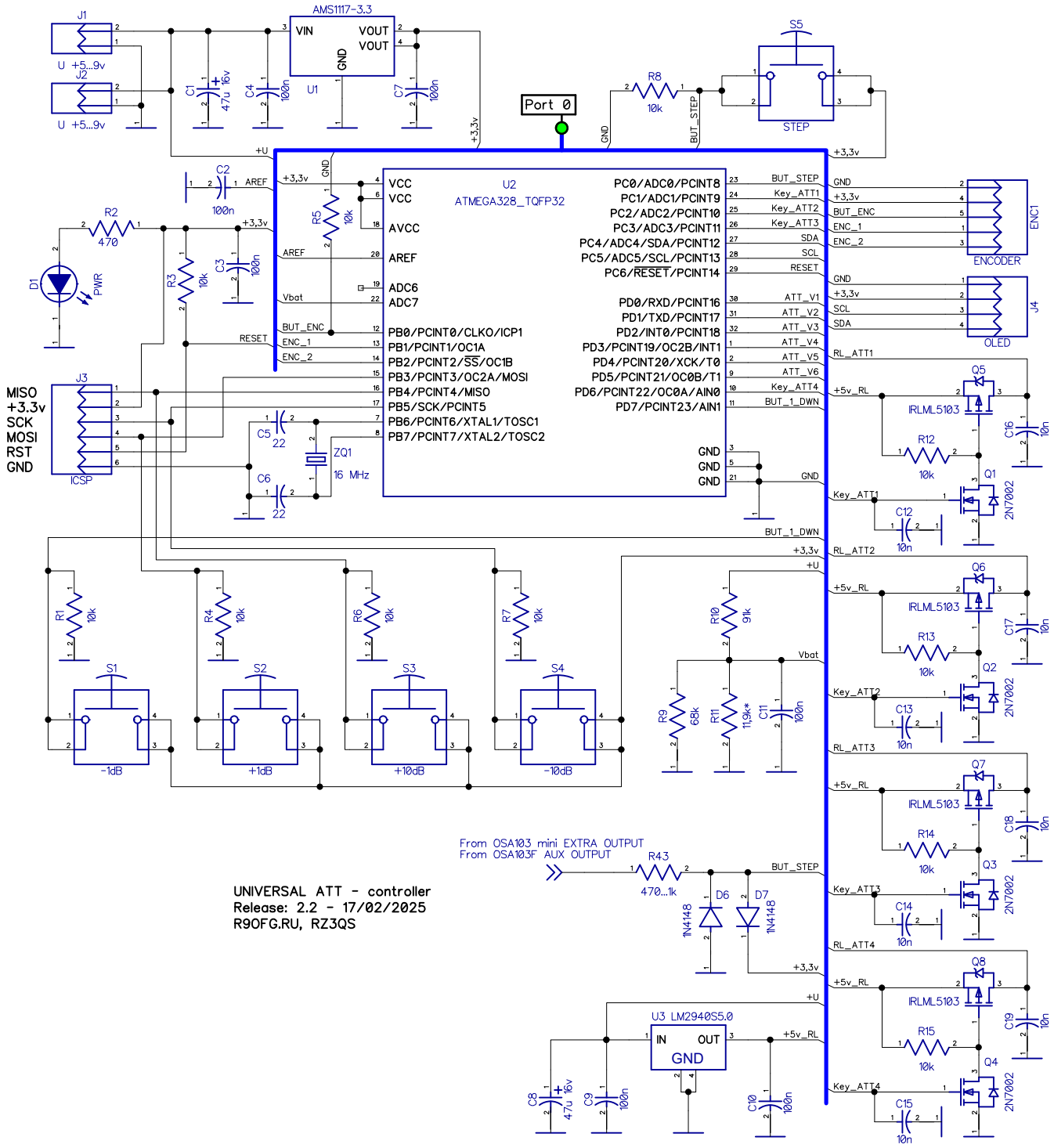

UNIVERSAL ATT - controller
Release: 2.2 - 17/02/2025
R9OFG.RU, RZ3QS